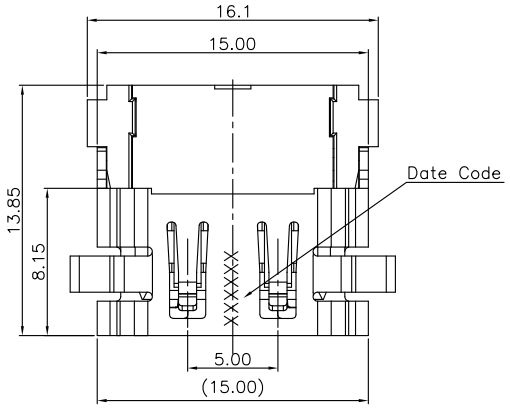

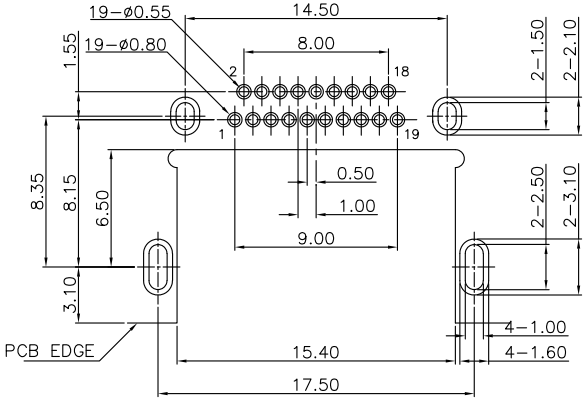

Recommended P.C.B Layout(Top View)
(Thickness=1.2±0.10mm)
(Tolerance=±0.03mm)

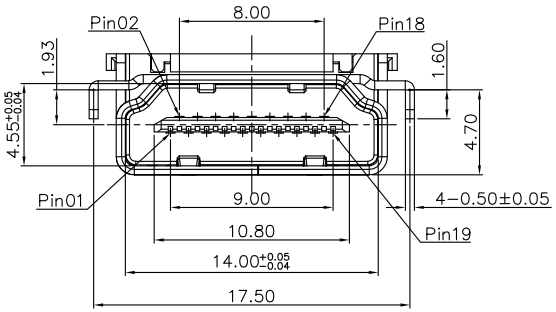

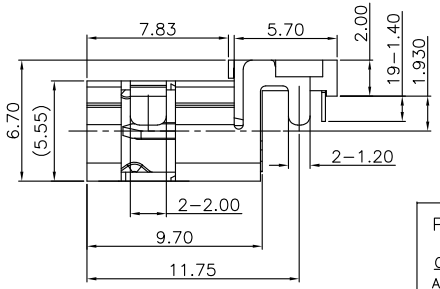

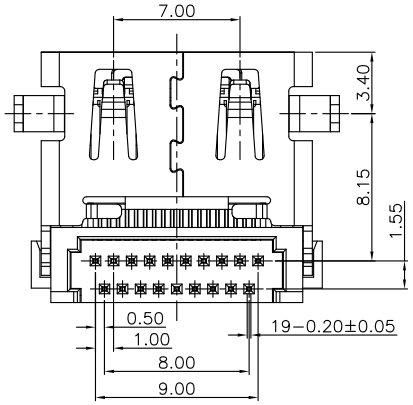

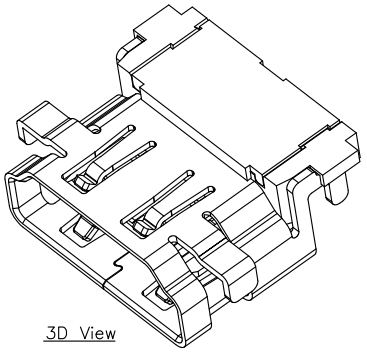

3D View

Notes:

1.Material Specification:
- 1−1.Housing: LCP+30% G.F UL94 V−0. Black.
- 1−2.Contact: Copper Alloy C2680 T=0.20mm.
- 1−3.Shell: Stainless Steel (SUS304) T=0.50mm.

2.Plating Specification:
- 2−1.Contact: see P/N.
- 2−2.Shell: Nickel Plated.

3.Mechanical Performance:
- 3−1.Insertion force: 44.1N (4.5kgf) max.
- 3−2.Withdrawal force: 4.9N~39.2N (0.5~4.0kgf).
- 3−3.Durability: 10,000 cycles.

4.Electrical Performance:
- 4−1.Current Rating: 0.5A.
- 4−2.LLCR: Contact: 30 mΩ max.(initial), Shell: 50 mΩ max.(initial).
- 4−3.Insulation Resistance: Unmated:100 MΩ min. at 500V DC, Mated:10 MΩ min. at 150V DC.
- 4−4.Dielectric withstand voltage: 300V AC/60s (mated), 500V AC/60s(unmated).

5.IR Reflow:
The peak temperature on board shall be maintained for 10 seconds at 260±5°C.

6.Operating temperature range: −35°C~105°C(without loss function).

7.All parts RoHS and Reach compliant.

Part Number: PHD2710X0003

Contact Plating Spec. Code:
- A: Gold Flash on Contact area, matte Tin 60μ" min. on Tails, and 50μ" min. Nickel overall.
- B: Au 5μ" on Contact area, matte Tin 80μ" min. on Tails and 50μ" min. Nickel overall.
- C: Au 15μ" on Contact area, matte Tin 80μ" min. on Tails, and 50μ" min. Nickel overall.
- 1: Gold Flash on Contact area, and on Tails. and 50μ" min.Nickel overall.

PIN	SIGNAL ASSIGNMENT	PIN	SIGNAL ASSIGNMENT
1	TMDS Data2+	11	TMDS Clock Shield
2	TMDS Data2 Shield	12	TMDS Clock−
3	TMDS Data2−	13	CEC
4	TMDS Data+	14	Reserved (N.C. on device)
5	TMDS Data1 Shield	15	SCL
6	TMDS Data1−	16	SDA
7	TMDS Data0+	17	DDC/CEC Ground
8	TMDS Data0 Shield	18	+5V Power
9	TMDS Data0−	19	Hot Plug Detect
10	TMDS Clock+		

THIS DRAWING AND SPECIFICATION ARE THE PROPERTY OF Prolanv AND SHALL NOT BE COPIED OR USED WITHOUT Prolanv PERMISSION

GENERAL TOLERANCES UNLESS SPECIFIED			
.X ±	0.30	X.° ±	3°
.XX ±	0.20	.X° ±	2°
.XXX ±	0.10	.XX° ±	1°

CUSTOMER DRAWING

SIZE	UNITS
A4	mm[inch]

PART NO. PHD2710X0003

APPROVED BY KYSIN

CHECKED BY HARRY

DRAWN BY LUCIE

Prolanv®

TITLE HDMI A Type 19pin Rec. 0.50 Pitch. RVS. Mid−Mount CH=1.93mm. Board−Height=2.00mm. DIP Type

DWG NO. PHD27-30

SHEET	SCALE	REV
1 / 2	1:1	B2

Copyright Prolanv precision www.prolanv.com

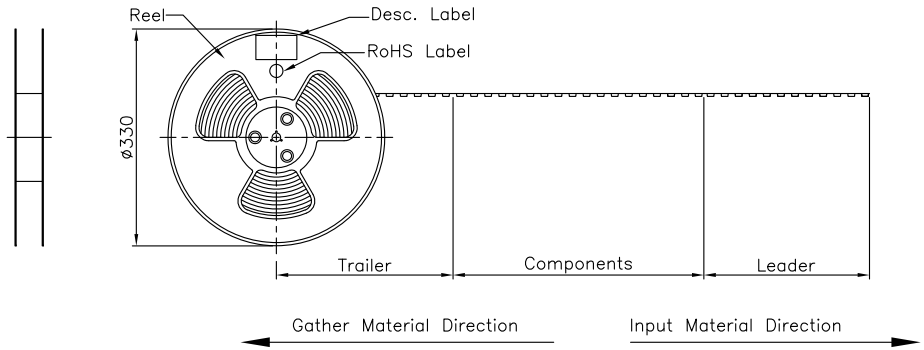

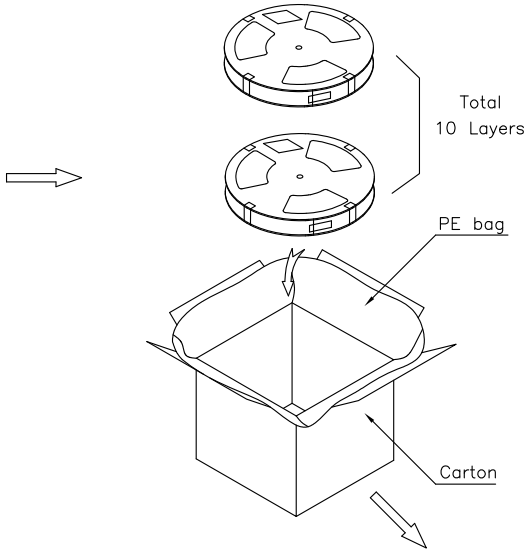

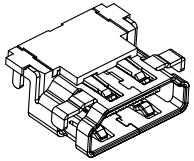

HDMI A Type

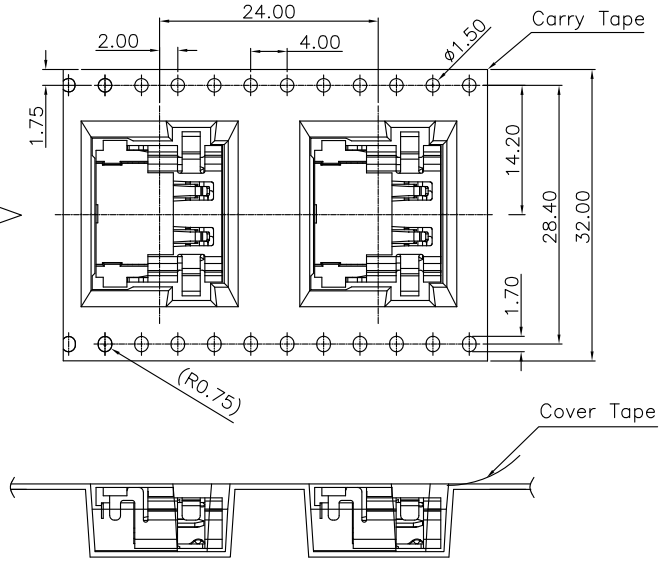

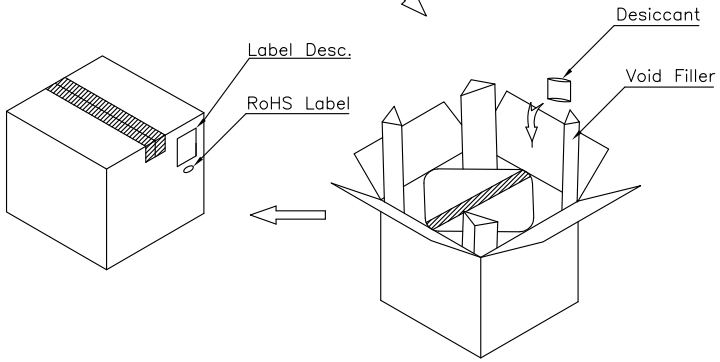

Notes:

1. The start and end of each Reel, Based on the actual quantity, Reserved 10~20 Pcs space,
2. Cover Tape and Carry Tape peel: 10gf~130gf, Peel Deg.:165°~175°, Peel speed: 250~300mm/min.,
3. Carton size: 350*350*380mm. K=K,
4. Q'ty: 350 Pcs/Reel, 10 Reels/Carton, Total 3,500 Pcs/Carton.

THIS DRAWING AND SPECIFICATION ARE THE PROPERTY OF Prolanv AND SHALL NOT BE COPIED OR USED WITHOUT Prolanv PERMISSION

GENERAL TOLERANCES UNLESS SPECIFIED			
.X ±	0.30	X.° ±	3°
.XX ±	0.20	.X° ±	2°
.XXX ±	0.10	.XX° ±	1°

CUSTOMER DRAWING

SIZE	UNITS
A4	mm[inch]

PART NO.	PHD2710X0003
APPROVED BY	KYSIN
CHECKED BY	HARRY
DRAWN BY	LUCIE

Prolanv®

TITLE: HDMI A Type 19pin Rec. 0.50 Pitch. RVS. Mid-Mount CH=1.93mm. BH=2.00mm. DIP Type Packaging

DWG NO. P-PHD27-30

SHEET	SCALE	REV
2 / 2	N/A	B2

Copyright Prolanv precision www.prolanv.com